SALES SERVICE
+358 (0)17 262 3555
info@econosto.fi

2010

Gate valve

F/F
Full bore - Steel Handwheel

Tech drawings and tables

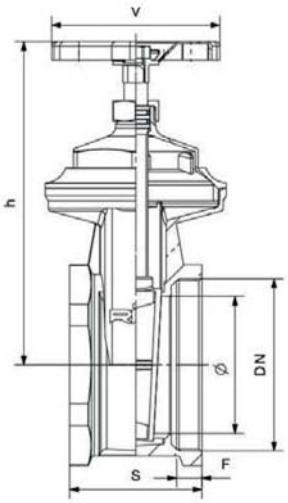

DN	Code	Ø	h	S	F	V	PN	KG	P/box
1/2"	032010000004	15	68	38	9	45	16	0,183	20
3/4"	032010000005	19	78	44	10	50	16	0,265	20
1"	032010000007	24	91	48	11	55	16	0,371	10
1"1/4	032010000008	32	108	51	12	60	16	0,583	10
1"1/2	032010000009	37	125	58	13	70	16	0,724	5
2"	032010000011	47	143	60	13	70	16	1,019	8
2"1/2	032010000013	60	155	64	16	100	16	1,586	1
3"	032010000014	72	178	74	16	100	16	2,138	1
3"1/2	032010000015	83	200	82	17	120	16	3,654	1
4"	032010000016	93	215	86	18	120	16	3,876	1
5"	032010000018	117	317	95	21	150	10	7,656	1
6"	032010000019	143	380	105	24	175	10	11,142	1

Technical data

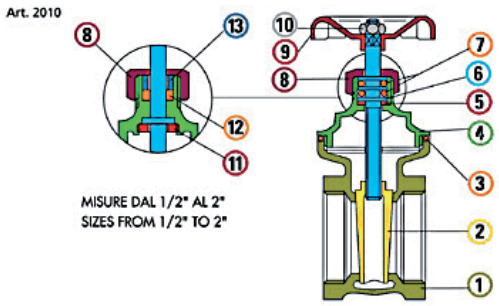

Materials				
1	Body	Brass	1/2" - 2" CW617N 2"1/2 - 6" CB754S	
2	Wedge	Brass	CB754S	
3	Gasket	Fibre		
4	Bonnet	Brass	CW617N	
5	Gasket	P.T.F.E.		
6	Stem	Brass	CW614N	
7	O-Ring	NBR		
8	Cap	Brass	CW614N	
9	Handwheel	Steel		Painted
10	Nut	Steel		Zinc-plated
11	Screwed ring	Brass	CW614N	
12	Tow packing	EPDM		
13	Stuffing-Box	Brass	CW614N	

Connections	ISO 228/1
Limit	-10°C (without liquid) +90°C
Notes	The max. working pressure (PN) means at a room temperature of about 23°C.